LACELA

Product: Electric Drill Art. No. 231032

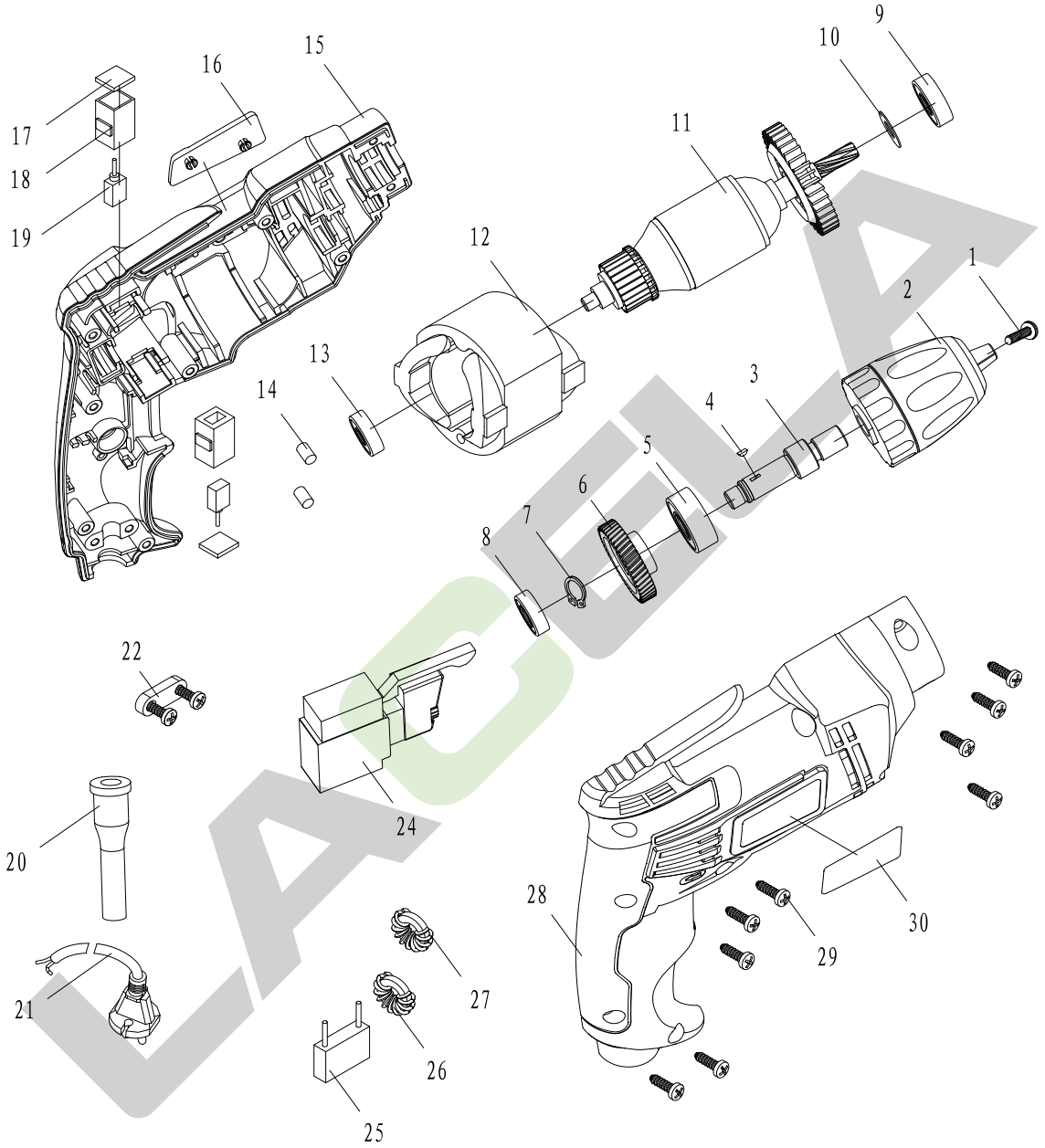

Version No.	D	Enable Time	2022.9

LACELA

Product:Electric Drill Art.No.231032

No.	Part Name(Chinese)	Part Name(English)	Code	Qty	No.	Part Name(Chinese)	Part Name(English)	Code	Qty
1	螺钉M5×22-LH	Screw M5×22-LH	30201075	1					
2	钻夹头	Chuck	10304001031	1					
3	输出轴	Output Spindle	10301001032	1					
4	半圆键3×3.7×10	Woodruff Key 3×3.7×10	30601004	1					
5	轴承6000(加厚)	Bearing 6000	30103009	1					
6	大齿轮	Gear	10302004048	1					
7	轴用弹性挡圈10	Circlip for Shaft 10	30301022	1					
8	轴承698	Bearing 698	30104068	1					
9	轴承608	Bearing 698	30103047	1					
10	平垫片8×17×0.5	flat washer 8×17×0.5	30403079	1					
11	转子	Armature	10502001067	1					
12	定子	Stator	10501001055	1					
13	轴承626	Bearing 626	30103099	1					
14	橡胶柱5×8	Rubber column 5×8	10102004097	2					
15	左机壳	Housing(left half)	10101002115	1					
16	塑料商标	Trademark	20401007012	1					
17	刷盖	Brush cap	10606001017	2					
18	刷架	Brush Holder	10606001019	2					
19	碳刷	Carbon brush	10605001121	2					
20	电缆护套	Cord Sleeve	10102001031	1					
21	电源线2×0.75	Cord 2×0.75	10602006007	1					
22	电缆压板	Cord Anchor	10101011123	1					
23	开关	Switch	10601001053	1					
24	电容	Capacitor	10603001016	1					
25	电感	Inductance	10604001008	1					
26	电感	Inductance	10604001050	1					
27	右机壳	Housing(right half)	10101002116	1					
28	自攻螺钉ST4×14	Screw ST4×14	30202019	9					
29	铭牌	Name plate	20302007275	1					

Version No.	D	Enable Time	2022.9